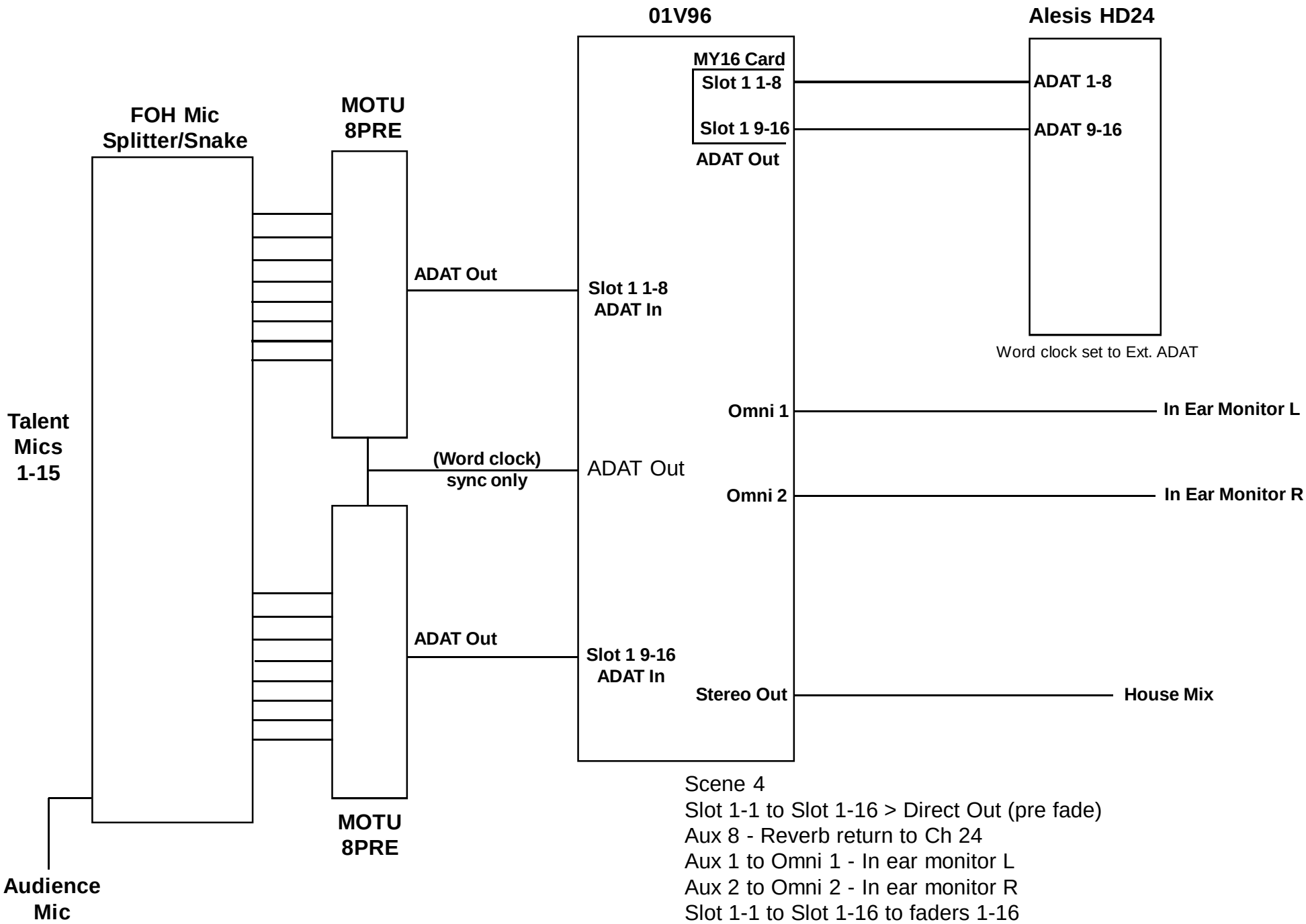

Scene 4
Slot 1-1 to Slot 1-16 > Direct Out (pre fade)
Aux 8 - Reverb return to Ch 24
Aux 1 to Omni 1 - In ear monitor L
Aux 2 to Omni 2 - In ear monitor R
Slot 1-1 to Slot 1-16 to faders 1-16
Talkback mic to AD12/AD12 to ST IN 34/ST IN 34 to Aux 1